TCCR4MP056-C | DATASHEET

OPTO ENGINEERING

Bi-telecentric CORE lens for 4/3" detectors, magnification 0.313x, C mount

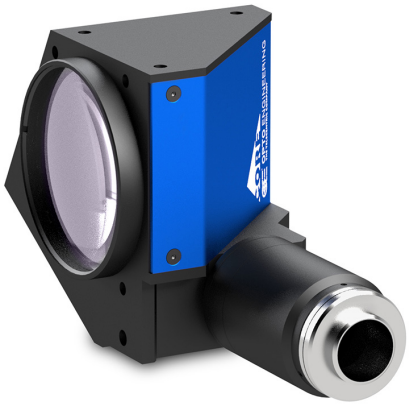

KEY ADVANTAGES

Excellent optical performances

TC4MHR CORE bi-telecentric lenses deliver excellent optical performances as other comparable Opto Engineering® bi-telecentric lenses.

Extremely compact

TC4MHR CORE lenses are up to 70% smaller than other telecentric lenses on the market.

Designed for flexibility and smart integration

TC4MHR CORE lenses integrate a camera phase adjustment and can be mounted on multiple sides with or without clamps, allowing you to cut the costs.

Save you money

Systems integrating TC4MHR CORE lenses take much less space,resulting in lower manufacturing, shipping and storage costs.

Boost your sales

A smaller vision system or measurement machine is the solution preferred by the industry.

REACH DOSSIER PATENTED

TC4MHR CORE series are ultra compact telecentric lenses tailored for high-resolution sensors up to 4/3".

SPECIFICATIONS

Optical specifications		
Magnification		0.313
Image shape dimension[1]	(⌀, x mm)	⌀=22.0, x=19.2
Max sensor size		4/3"
Working distance[3]	(mm)	157.8
wf/N[4]		8
Telecentricity typical (max)[5]	(°)	<0.05 (0.10)
Distortion typical (max)[6]	(%)	<0.07 (0.10)
Field depth[7]	(mm)	4.2
Resolution (max)[8]	(µm)	16

Mechanical specifications		
Mount		C
Phase adjustment[9]		Yes
A[10]	(mm)	93.6
B[10]	(mm)	110.7
C[10]	(mm)	183.2
Mass	(g)	1631

FIELD OF VIEW

Sensors	(mm x mm)
1" (14.19 x 7.51 mm)	45.34 x 23.99
1.1" (14.16 x 10.37 mm)	45.24 x 33.13
4/3" (18.93 x 10.61 mm)[2]	60.48 x 33.90

[1] Indicates the dimensions and shape of image, where "⌀ =" stands for diameter and "x=" indicates the nominal image height and length
[2] With IMX387 sensor, the FOV may show some vignetting. Carefully check image shape dimensions.
[3] Working distance: distance between the front end of the mechanics and the object. Set this distance within ±3% of the nominal value for maximum resolution and minimum distortion.
[4] working f/N: the real f/N of a lens in operating conditions.
[5] Maximum angle between chief rays and optical axis on the object side. Typical (average production) values and maximum (guaranteed) values are listed.
[6] Percent deviation of the real image compared to an ideal, undistorted image. Typical (average production) values and maximum (guaranteed) values are listed.
[7] At the limits of the depth of field, the image can still be used for measurements. For a very sharp image, however, only half of the depth of field should be considered. Pixel size used for calculation is 3.45 µm.
[8] Object side, calculated with the Rayleigh criterion with λ= 520 nm
[9] Indicates the availability of an integrated camera phase adjustment feature.
[10] Due to special shape of TCCR120xx it might be necessary to check the mechanical compatibility with your camera.

All product specifications and data are subject to change without notice to improve reliability, functionality, design or other. Photos and pictures are for illustration purposes only. Data are reported by design, actual lens performance may vary due to manufacturing tolerances.

IMAGE SHAPE DIMENSION

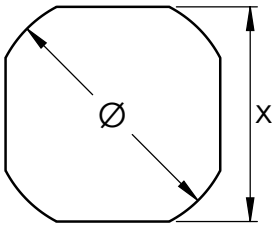

COMPATIBLE PRODUCTS

Full list of compatible products available *here*.



A wide selection of innovative machine vision components.

TC CORE LENS DIMENSION (A, B, C) AND CORRECT SENSOR POSITION

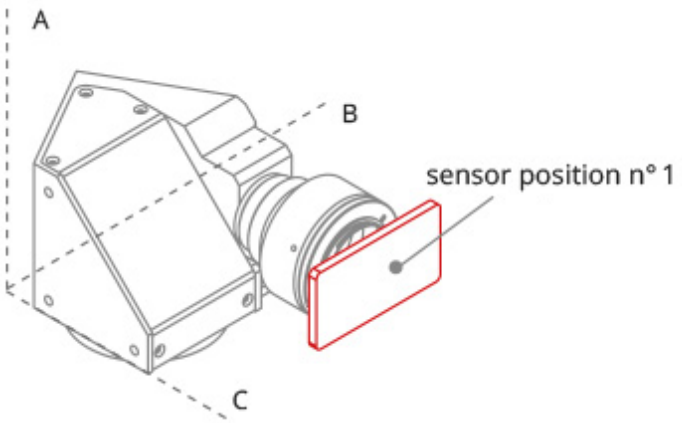

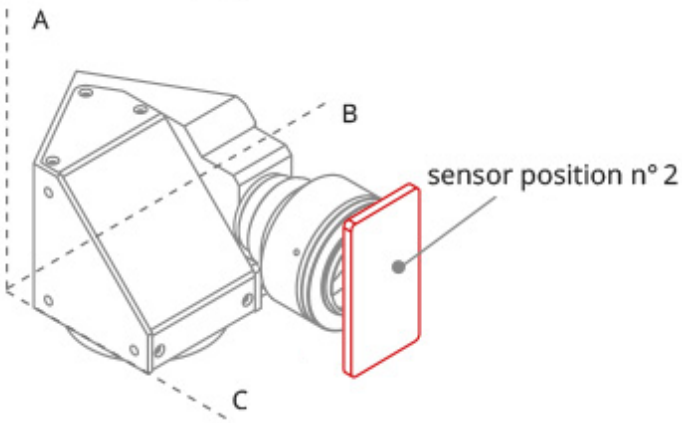

All product specifications and data are subject to change without notice to improve reliability, functionality, design or other. Photos and pictures are for illustration purposes only. Data are reported by design, actual lens performance may vary due to manufacturing tolerances.

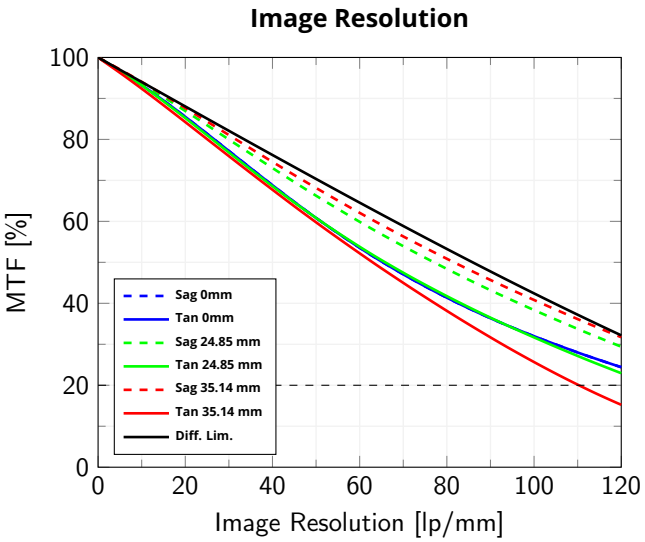

Modulation Transfer Function (MTF) vs. Image Resolution, wavelength range 486 nm - 656 nm

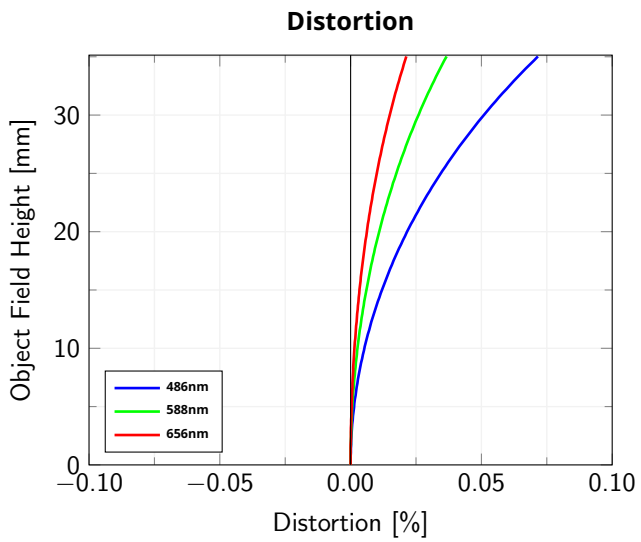

Object Field Height vs. Distortion, from the optical axis to the corner of the field of view

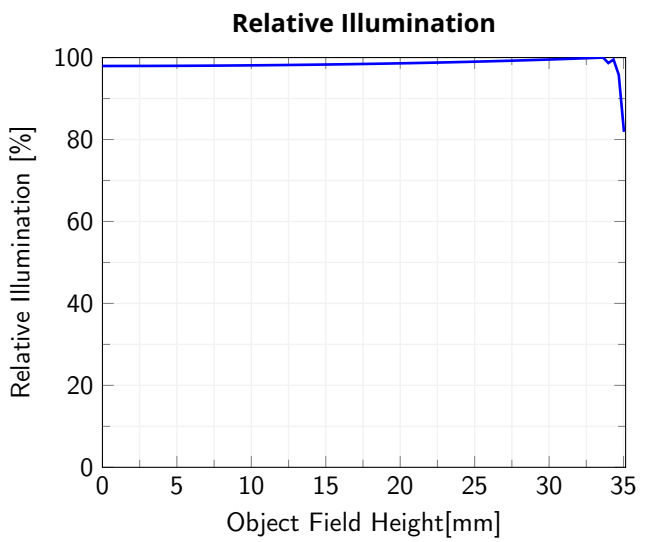

Relative illumination vs. Object Field Height, from the optical axis to the corner of the field of view

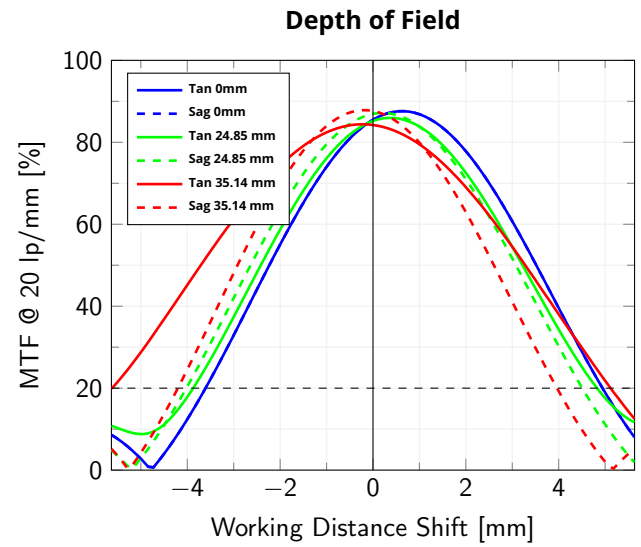

Modulation Transfer Function (MTF) @ 20 lp/mm vs. Working Distance Shift from the best focus Working Distance, wavelength range 486 nm - 656 nm

All product specifications and data are subject to change without notice to improve reliability, functionality, design or other. Photos and pictures are for illustration purposes only. Data are reported by design, actual lens performance may vary due to manufacturing tolerances.