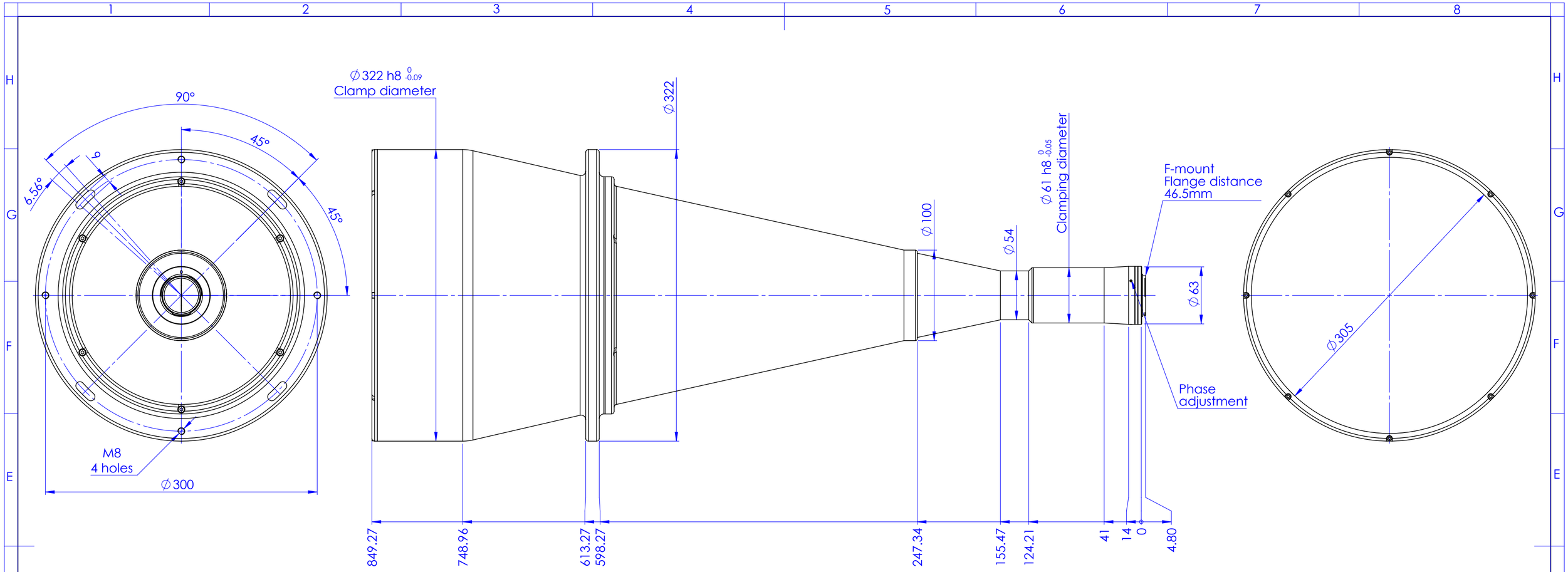

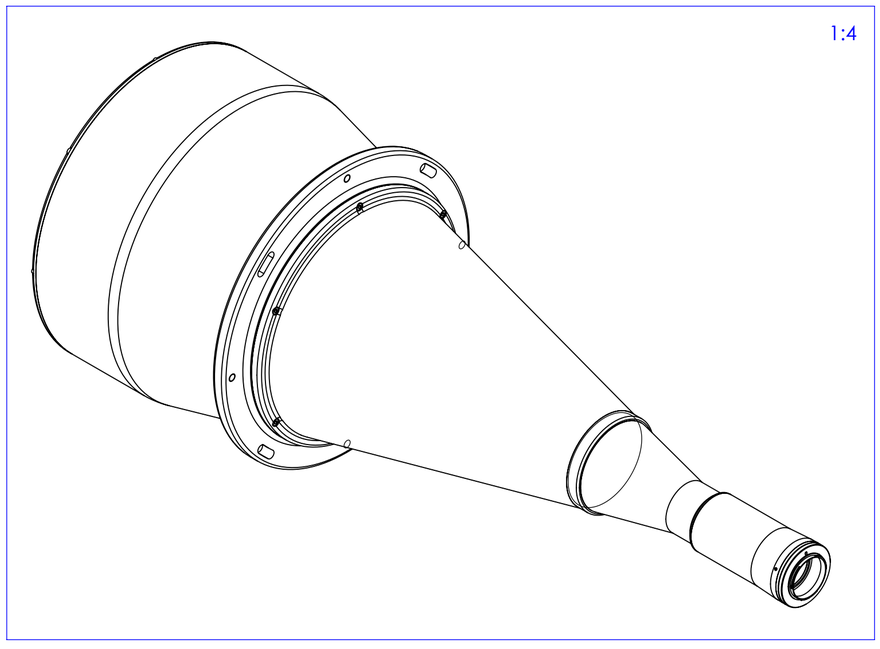

Material	N.A.							Mass	18564 g
Surface treatment	N.A.							Scale	1:3
Geometrical tolerance (ISO 2768-2)						Class	K	Part No.	CO27917
Linear tolerance (ISO 2768-2)						Class	m		
0.5 ÷3	>3÷ 6	>6÷ 30	>30÷ 120	>120 ÷400	>400÷ 1000	>1000 ÷2000	>2000 ÷4000	Undimensioned bevels	0.5x45°
±0.1	±0.1	±0.2	±0.3	±0.5	±0.8	±1.2	±2	Undimensioned radii	R 0.5

Description: TC12M240-F

	Date	Name
Designed	28/06/2018	Ccharly
Drawn	28/09/2018	Rodella
Checked	28/09/2018	Ccharly

Drawing No.: DP 27917-C

Sheet: 1/1

all dimensions are in mm

OPTO ENGINEERING

OPTO ENGINEERING S.r.l. - Mantova, Italy - Tel. +39 0376699111 - www.opto-e.com

Secret and confidential - All rights reserved - No copy, dissemination or circulation is allowed unless specifically authorized in writing by OPTO ENGINEERING S.r.l. - Any violation shall be legally prosecuted.